City of Carroll

112 E. 5th Street Carroll, Iowa 51401-2799 (712) 792-1000 FAX: (712) 792-0139

MEMO TO: Mike Pogge-Weaver, City Manager MTP-W

FROM: Randall M. Krauel, Director of Public Works RMK

DATE: September 4, 2018

SUBJECT: SprintCom Water Tower Equipment Modifications

SprintCom, Inc. is proposing to make modifications to their equipment at the Water Tower site. The modifications are primarily to the Tower-mounted equipment. The project descriptions is detailed in the Agreement Amendment and summarized as follows:

- Remove 3 panel antennas
- Install 3 panel antennas
- Three existing 1900 MHz RRHs to remain at top of Tower
- Install 3 2500 MHz RRHs at top of Tower
- Install 3 850 MHz RRHs at top of Tower
- Install 3 hybrid cables
- Install 48 jumpers
- Install 3 AISG calibration cables
- Install 3 fiber junction cylinders
- Install 3 power junction cylinders

Attached is a copy of a proposed Second Amendment to Water Tower Attachment Option and Lease Agreement that incorporates the proposed modifications into the Lease Agreement.

RECOMMENDATION: Mayor and City Council consideration and passage and approval of the Resolution Approving the Second Amendment to Water Tower Attachment Option and Lease Agreement with SprintCom, Inc.

RMK:ds

attachment (2)

RESOLUTION NO. _____

RESOLUTION APPROVING THE SECOND AMENDMENT TO WATER TOWER ATTACHMENT OPTION AND LEASE AGREEMENT WITH SPRINTCOM, INC.

WHEREAS, Chapter 17 of the Code of Ordinances of the City of Carroll, Iowa provides that contracts made by the City be approved by the City Council; and,

WHEREAS, a Second Amendment to Water Tower Attachment Option and Lease Agreement with SpringCom, Inc. has been prepared; and,

WHEREAS, the City Council has determined that the Second Amendment to Water Tower Attachment Option and Lease Agreement is in the best interests of the City and the residents thereof.

NOW, THEREFORE, BE IT RESOLVED by the City Council of the City of Carroll, Iowa, that the Second Amendment to Water Tower Attachment Option and Lease Agreement is approved and the Mayor is authorized to execute the Amendment.

Passed and approved by the Carroll City Council this 10th day of September, 2018.

CITY COUNCIL OF THE
CITY OF CARROLL, IOWA

By: _____
Eric P. Jensen, Mayor

ATTEST:

By: _____
Laura A. Schaefer, City Clerk

Site ID #: DM03IP433

SECOND AMENDMENT TO WATER TOWER ATTACHMENT OPTION AND LEASE AGREEMENT

This **SECOND AMENDMENT TO WATER TOWER ATTACHMENT OPTION AND LEASE AGREEMENT** (this "**Amendment**"), effective as of the date last signed below ("**Effective Date**"), amends a certain Water Tower Attachment Option and Lease Agreement dated November 12, 2001, between SprintCom, Inc., a Kansas corporation, successor by merger to iPCS Wireless, LLC (formerly a corporation), a Delaware limited liability company ("**Optionee/Lessee/Tenant**"), and the City of Carroll, Iowa ("**Optionor/Lessor/Landlord**"), as amended by the First Amendment to Water Tower Attachment Option and Lease Agreement dated May 26, 2015 (the "**Agreement**").

BACKGROUND

WHEREAS, Tenant desires to modify its installation on the Parcel and Tower by adding or swapping out antennas and other equipment to the Equipment, as more particularly described in Exhibit B-1 annexed hereto; and

WHEREAS, Tenant and Landlord desire to modify certain provisions of the Agreement as provided below.

AGREEMENT

For good and valuable consideration the receipt and sufficiency of which are acknowledged, Landlord and Tenant agree as follows:

1. **Modification to the Equipment.** Exhibit B to the Agreement is hereby amended to include the modifications identified on Exhibit B-1, a copy of which is attached and made a part hereof. Exhibit B-1 supplements Exhibit B to the Agreement, and is not deemed to supersede or otherwise modify Exhibit B or any part thereof except to the extent specifically set forth in Exhibit B-1. Upon full execution of this Amendment, Tenant is permitted to do all work necessary to prepare, maintain and alter the Parcel to install or otherwise modify the Equipment, all as more fully described and contemplated in Exhibit B-1.

2. **General Terms and Conditions.**

a. All capitalized terms used in this Amendment, unless otherwise defined herein, will have the same meaning as the terms contained in the Agreement.

b. In case of any inconsistencies between the terms and conditions contained in the Agreement and the terms and conditions contained in this Amendment, the terms and conditions herein will control. Except as set forth herein, all provisions of the Agreement are ratified and remain unchanged and in full force and effect.

c. This Amendment may be executed in duplicate counterparts, each of which will be deemed an original.

d. Each of the parties represents and warrants that it has the right, power, legal capacity and authority to enter into and perform its respective obligations under this Amendment.

*****SIGNATURES ON FOLLOWING PAGE*****

The parties have executed this Amendment as of the Effective Date.

Landlord: City of Carroll, Iowa		**Tenant:** SprintCom, Inc., a Kansas corporation	
By:		By:	
Printed Name:	Eric P. Jensen	Printed Name:	
Title:	Mayor	Title:	
Date:	September 10, 2018	Date:	, 2018

EXHIBIT B-1

LESSEE'S PERSONAL PROPERTY AND DESCRIPTION OF LESSEE'S EQUIPMENT ON THE PARCEL AND TOWER

[see attached]

SITE INFORMATION

TOWER INFORMATION

LATITUDE: 42.0737°
LONGITUDE: -94.8630°
GROUND ELEV: 1325'
SITE TYPE: WATER TOWER
COUNTY: CARROLL
JURISDICTION: CITY OF CARROLL
LANDLORD SITE ID#: N/A

PROJECT DESCRIPTION:

* REMOVE (3) PANEL ANTENNAS
* INSTALL (3) PANEL ANTENNAS (ETCR-654L12H6)
* (3) EXISTING 1900MHz RRH'S TO REMAIN AT TO TOWER TOP
* INSTALL (3) 2500MHz RRH'S (RRH-B8) AT TOWER TOP
* INSTALL (3) 800MHz RRH'S (RRH-C4) AT TOWER TOP
* INSTALL (3) HYBRID CABLES
* INSTALL (48) JUMPERS
* INSTALL (3) AISG CALIBRATION CABLES
* INSTALL (3) FIBER JUNCTION CYLINDERS
* INSTALL (3) POWER JUNCTION CYLINDERS

APPLICANT:

SPRINT
6580 SPRINT PARKWAY
OVERLAND PARK, KS 66251

A&E FIRM:

W-T COMMUNICATION DESIGN GROUP, LLC
2675 PRATUM AVENUE
HOFFMAN ESTATES, IL 60192
CONTACT: KATIE OLESEN
PHONE: (224) 293-6333
FAX: (224) 293-6444
www.wtengineering.com

SITE ACQUISITION CONTACT:

NTP WIRELESS
CONTACT: RAYMOND BEER
PHONE: (773) 275-5712
E-MAIL: raymond.beer@ntpwireless.com

LANDLORD:

CITY OF CARROLL
112 E. 5TH STREET
CARROLL, IA 51401
PHONE: (712) 792-1000

REFERENCED MATERIALS

A SITE WALK WAS NOT PERFORMED FOR THIS SITE PER SCOPE OF WORK. COMPOUND, ELEVATION, SHELTER/EQUIPMENT LAYOUT AND ANTENNA PLANS SHOWN WITHIN THIS SET WERE TAKEN FROM AVAILABLE DOCUMENTS/DRAWINGS.

VICINITY MAP

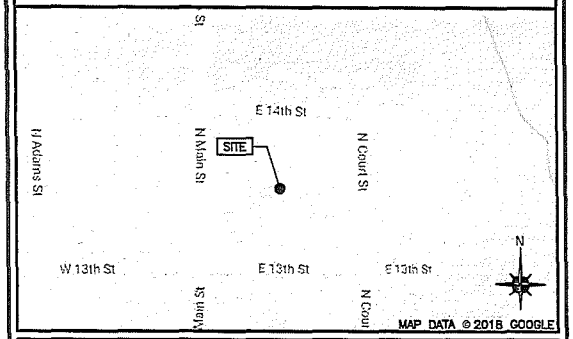

AERIAL MAP

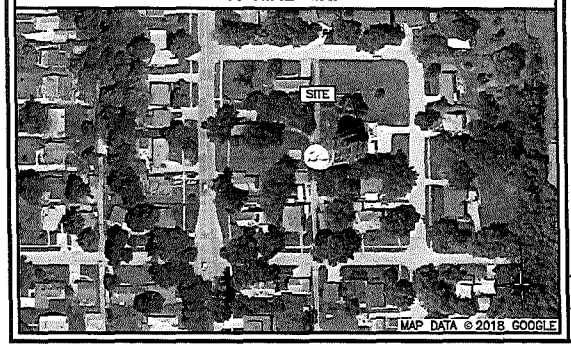

SHEET INDEX

SHEET:	SHEET TITLE:	REV:
T-1	TITLE SHEET & SITE PLAN	0
A-1	TOWER ELEVATION, ANTENNA PLAN & DETAILS	0
A-2	SITE DETAILS	0
A-3	PLUMBING DIAGRAM	0

APPLICABLE CODES

* ALL WORK SHALL BE PERFORMED AND MATERIALS INSTALLED IN ACCORDANCE WITH THE FOLLOWING CODES AS ADOPTED BY THE LOCAL GOVERNING AUTHORITIES. NOTHING IN THESE PLANS IS TO BE CONSTRUED TO PERMIT WORK NOT CONFORMING TO THESE CODES.

BUILDING CODE:

2015 INTERNATIONAL BUILDING CODE

ELECTRICAL CODE:

2014 NATIONAL ELECTRICAL CODE

811 Know what's below. Call before you dig. www.call811.com

PROJECT:
DO MACRO UPGRADE 800/2500/TRIBAND

SITE CASCADE:
DM03IP433

SITE NAME:
IPCS-DM03IP433-A

SITE TYPE:
140'-0" WATER TOWER

SITE ADDRESS:
1317 NORTH COURT
CARROLL, IA 51401

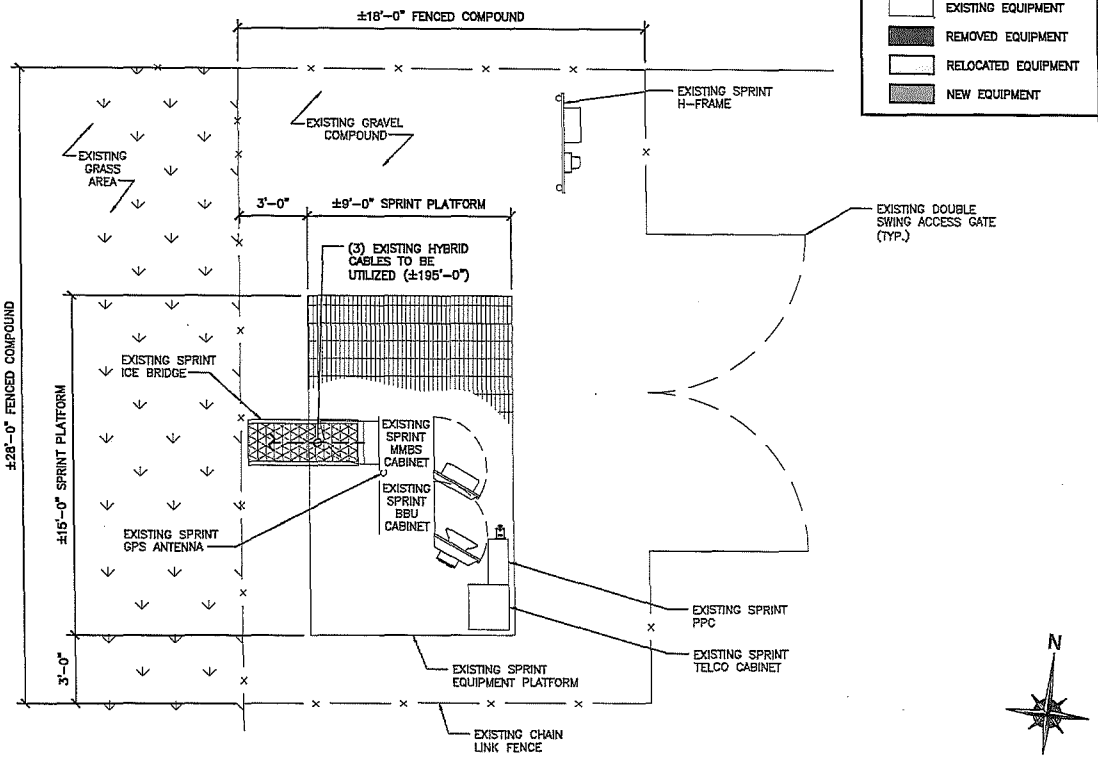

SITE PLAN

SCALE: 3/16" = 1'-0"

1

PLANS PREPARED FOR:

Sprint

SITE ACQUISITION:

NTPWIRELESS
EVERY SITE. EVERY DAY

PLANS PREPARED BY:

W-T
W-T COMMUNICATION DESIGN GROUP, LLC.
WIRELESS INFRASTRUCTURE
2675 Pratum Avenue
Hoffman Estates, Illinois 60192
PH: (224) 293-6333 FAX: (224) 293-6444
www.wtengineering.com

COPYRIGHT © 2016 W-T COMMUNICATION DESIGN GROUP, LLC.

A&E LICENSE:

LICENSED PROFESSIONAL ENGINEER
JEFF S. GUTOWSKY
17222
IOWA

JEFFERY S. GUTOWSKY
PROFESSIONAL ENGINEER
STATE OF IOWA
LICENSE # 17222
EXPIRES: 12/31/19 SIGNED: 02/01/18

DRAWING NOTICE:

THESE DOCUMENTS ARE CONFIDENTIAL AND ARE THE SOLE PROPERTY OF SPRINT AND MAY NOT BE REPRODUCED, DISSEMINATED OR REDISTRIBUTED WITHOUT THE EXPRESS WRITTEN CONSENT OF SPRINT

REVISIONS:

DESCRIPTION	DATE	BY	REV
FOR CLIENT REVIEW	09.25.17	KLO	A
FINAL	02.01.18	ATK	0

W-T PROJECT NUMBER: T1701260

SITE CASCADE: DM03IP433

SITE ADDRESS: 1317 NORTH COURT CARROLL, IA 51401

PROJECT: DO MACRO UPGRADE 800/2500/TRIBAND

SHEET DESCRIPTION: TITLE SHEET & SITE PLAN

SHEET NUMBER: T-1

NOTE:
W-T'S SCOPE OF WORK DOES NOT INCLUDE A STRUCTURAL EVALUATION OF THIS TOWER OR STRUCTURE. NEW ANTENNAS AND EQUIPMENT SHOWN ON THIS PLAN HAVE NOT BEEN EVALUATED TO VERIFY THE TOWER OR STRUCTURE HAS THE CAPACITY TO ADEQUATELY SUPPORT THESE ANTENNAS. PRIOR TO ANY ANTENNA OR EQUIPMENT INSTALLATION, A STRUCTURAL EVALUATION OF THE TOWER OR STRUCTURE, INCLUDING ALL ANTENNA MOUNTING SYSTEMS & HARDWARE SHALL BE PERFORMED.

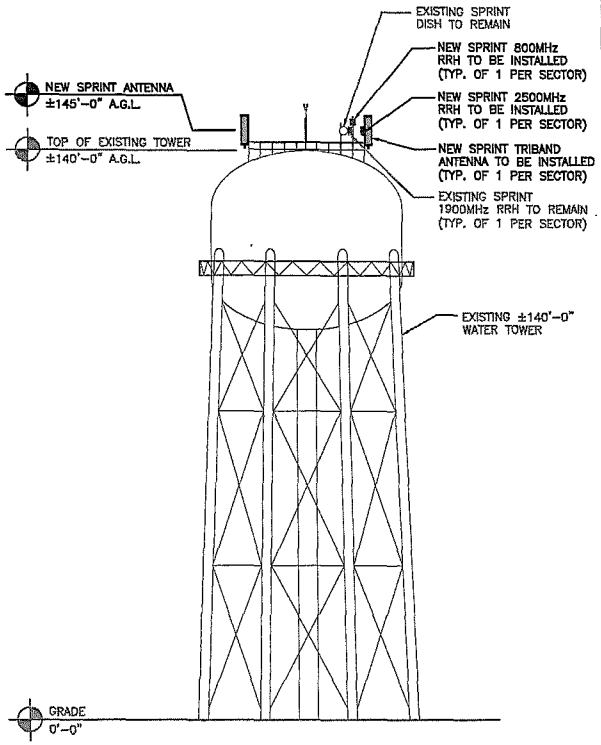

NEW TOWER ELEVATION

SCALE: 1" = 30'-0"

1

NOTE:
CONTRACTOR TO REPLACE EXISTING ANTENNA MAST PIPE WITH NEW 8'-0" MAST PIPE TO ACCOMMODATE NEW ANTENNA & RRH'S AS NEEDED

NOTE:
CONTRACTOR TO CONFIRM AZIMUTHS

NOTE:
CONTRACTOR TO REMOVE (3) EXISTING ANTENNA'S & (3) EXISTING 800MHz RRH'S (TYP. OF 1 PER SECTOR)

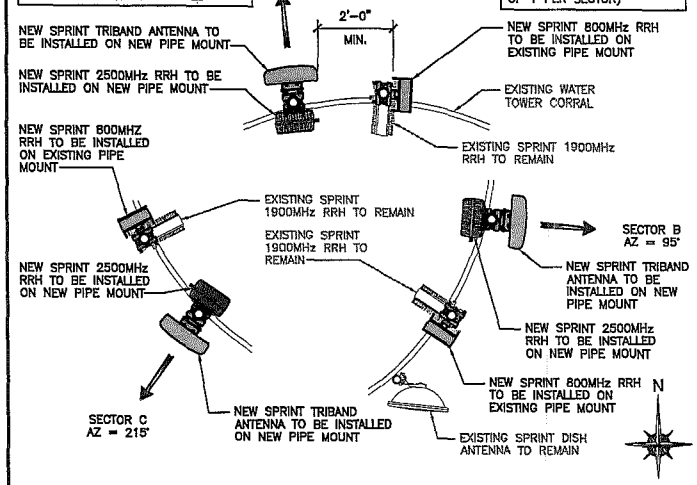

NEW ANTENNA & RRH PLAN

SCALE: NOT TO SCALE

2

NOTE:
THIS DETAIL IS DIAGRAMMATIC AND MAY NOT DEPICT SITE SPECIFIC CONDITIONS. SEE ANTENNA PLAN (2/A-1) FOR EXACT EQUIPMENT LOCATIONS.

NOTE:
EXISTING RRH(S) NOT SHOWN FOR CLARITY.

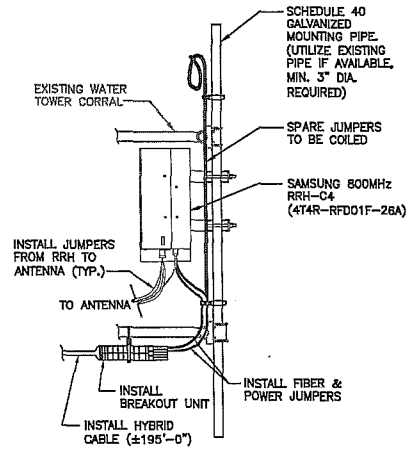

800MHz RRH DETAIL

SCALE: NOT TO SCALE

3

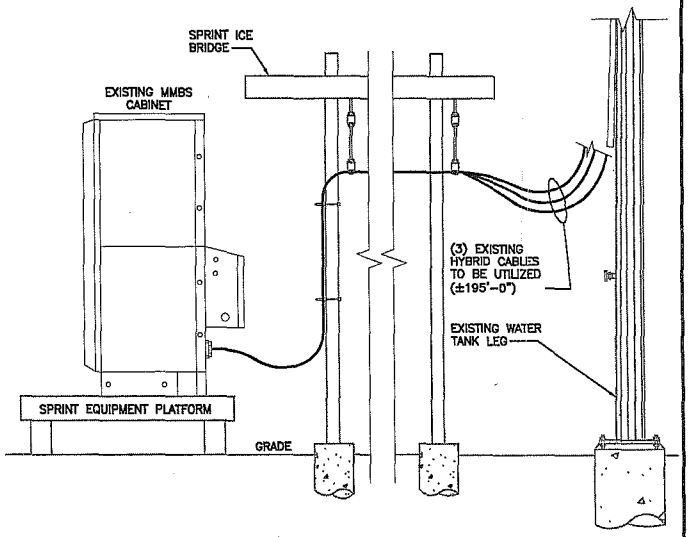

EQUIPMENT ELEVATION DETAIL

SCALE: NOT TO SCALE

4

NOTE:
CONTRACTOR TO INSTALL (3) NEW AISG CALIBRATION CABLES (TYP. OF 1 PER SECTOR)

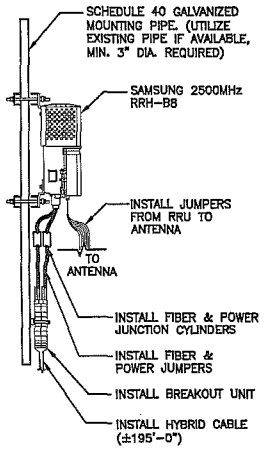

2500MHz RRH DETAIL

SCALE: NOT TO SCALE

5

PLANS PREPARED FOR:

Sprint

SITE ACQUISITION:

NTPWIRELESS
EVERY SITE. EVERY DAY

PLANS PREPARED BY:

W-T COMMUNICATION DESIGN GROUP, LLC.
WIRELESS INFRASTRUCTURE
2575 Pratum Avenue
Hoffman Estates, Illinois 60192
PH: (224) 293-5333 FAX: (224) 293-5444
www.wtengineering.com

COPYRIGHT © 2018 W-T COMMUNICATION DESIGN GROUP, LLC.

A&E LICENSE:

LICENSED PROFESSIONAL ENGINEER
JEFF S. GUTOWSKY
17222
IOWA

JEFFERY S. GUTOWSKY
PROFESSIONAL ENGINEER
STATE OF IOWA
LICENSE # 17222
EXPIRES: 12/31/19 SIGNED: 02/01/18

DRAWING NOTICE:

THESE DOCUMENTS ARE CONFIDENTIAL AND ARE THE SOLE PROPERTY OF SPRINT AND MAY NOT BE REPRODUCED, DISSEMINATED OR REDISTRIBUTED WITHOUT THE EXPRESS WRITTEN CONSENT OF SPRINT

REVISIONS:

DESCRIPTION	DATE	BY	REV
FOR CLIENT REVIEW	09.25.17	KLD	A
FINAL	02.01.18	ATK	0

W-T PROJECT NUMBER:

T1701260

SITE CASCADE:

DM03IP433

SITE ADDRESS:

1317 NORTH COURT
CARROLL, IA 51401

PROJECT:

DO MACRO UPGRADE
800/2500/TRIBAND

SHEET DESCRIPTION:

TOWER ELEVATION, ANTENNA PLAN & DETAILS

SHEET NUMBER:

A-1

GENERAL:

1. THE CONTRACTOR SHALL BE RESPONSIBLE FOR THE FOLLOWING ALL LAWS, REGULATIONS, AND RULES SET FORTH BY FEDERAL, STATE, AND LOCAL AUTHORITIES WITH JURISDICTION OVER THE PROJECT. THIS RESPONSIBILITY IS IN EFFECT REGARDLESS OF WHETHER THE LAW, ORDINANCE, REGULATION OR RULE IS MENTIONED IN THESE SPECIFICATIONS.
2. ALL WORK SHALL BE COMPLETED AS INDICATED ON THE DRAWINGS, PROJECT SPECIFICATIONS, AND THE CONSTRUCTION CONTRACT DOCUMENTS.
3. THE CONTRACTOR SHALL HAVE AND MAINTAIN A VALID CONTRACTOR'S LICENSE FOR THE LOCATION IN WHICH THE WORK IS TO BE PERFORMED. FOR JURISDICTIONS THAT LICENSE INDIVIDUAL TRADES, THE TRADESMAN OR SUBCONTRACTOR PERFORMING THOSE TRADES SHALL BE LICENSED.
4. FOLLOW ALL APPLICABLE RULES AND REGULATIONS OF THE OCCUPATIONAL SAFETY AND HEALTH ADMINISTRATION (OSHA) AND STATE LAW AS DEFINED IN THE FEDERAL OCCUPATIONAL SAFETY AND HEALTH ACT.
5. PRIOR TO THE SUBMISSION OF THE BID, THE CONTRACTOR SHALL VISIT THE JOB SITE, VERIFY ALL DIMENSIONS AND BECOME FAMILIAR WITH THE FIELD CONDITIONS. ANY DISCREPANCIES SHALL BE BROUGHT TO THE ATTENTION OF THE PROJECT MANAGER.
6. DRAWING PLANS SHALL NOT BE SCALED.
7. THE CONTRACTOR SHALL NOT PROCEED WITH ANY WORK NOT CLEARLY IDENTIFIED ON THE DRAWINGS WITHOUT THE PRIOR WRITTEN APPROVAL OF THE PROJECT MANAGER.
8. THE CONTRACTOR SHALL INSTALL ALL EQUIPMENT AND MATERIALS IN ACCORDANCE WITH MANUFACTURER RECOMMENDATIONS UNLESS SPECIFICALLY OTHERWISE NOTED.
9. ALL MEANS AND METHODS OF CONSTRUCTION DEALING WITH TOWER CONSTRUCTION AND SAFETY, STEEL ERECTION, EXCAVATIONS, TRENCHING, SCAFFOLDING, FORMWORK, ELECTRICAL, AND WORK IN CONFINED SPACES ARE THE SOLE RESPONSIBILITY OF THE CONTRACTOR.
10. WHEN THE CONTRACTOR ACTIVITIES IMPEDE OR OBSTRUCT TRAFFIC FLOW, CONTRACTOR SHALL PROVIDE TRAFFIC CONTROL DEVICES, SIGNS, AND FLAGMEN IN ACCORDANCE WITH APPLICABLE FEDERAL, STATE, DOT AND LOCAL REQUIREMENTS.
11. THE CONTRACTOR SHALL COORDINATE SITE ACCESS AND SECURITY WITH THE PROPERTY OWNER AND THE PROJECT MANAGER PRIOR TO CONSTRUCTION.
12. THE CONTRACTOR SHALL BE RESPONSIBLE FOR COORDINATION WITH UTILITIES.
13. THE CONTRACTOR SHALL CALL THE LOCAL PUBLIC UTILITY LOCATING PROVIDER (811) A MINIMUM OF THREE BUSINESS DAYS PRIOR TO EXCAVATING IN THE PUBLIC RIGHT OF WAY.
14. THE CONTRACTOR SHALL BE RESPONSIBLE FOR LOCATING PRIVATE UTILITIES.
15. THE CONTRACTOR SHALL PROVIDE ANY TEMPORARY UTILITIES OR FACILITIES IT DEEMS NECESSARY TO COMPLETE THE WORK. THIS INCLUDES, NOT IS NOT LIMITED TO WATER, SEWER, POWER, TELEPHONE, HEAT, LIGHTING OR SECURITY.
16. WHEN EXCAVATING IN THE AREA OF EXISTING UTILITIES, THE CONTRACTOR SHALL USE REASONABLE CARE IN PROTECTING SUCH UTILITIES. CONTRACTOR SHALL NOTIFY THE PROJECT MANAGER IMMEDIATELY OF ANY CONFLICTS BETWEEN EXISTING UTILITIES AND PROPOSED CONSTRUCTION.
17. DAMAGE TO PUBLIC OR PRIVATE UTILITIES SHALL BE REPORTED TO THE PROJECT MANAGER AND THE OWNER OF THE UTILITY IMMEDIATELY. ANY DAMAGE RESULTING FROM CONTRACTORS NEGLIGENCE OR FAILURE TO ACT WITH DUE REGARD SHALL BE REPAIRED AT CONTRACTORS EXPENSE.
18. UNLESS OTHERWISE NOTED ON THE PLANS, CONTRACTOR SHALL ASSUME ALL SURFACE FEATURES SUCH AS BUT NOT LIMITED TO BUILDINGS, PAVEMENTS, LANDSCAPING FEATURES, PLANTS, ETC. ARE TO BE SAVED AND PROTECTED FROM DAMAGE. CONTRACTOR SHALL MAKE NECESSARY PROVISIONS TO PROTECT EXISTING SITE CONDITIONS AND UPON COMPLETION OF WORK REPAIR BACK TO ORIGINAL CONDITIONS ANY DAMAGE THAT OCCURRED DURING CONSTRUCTION.
19. KEEP THE CONSTRUCTION SITE CLEAN AND HAZARD FREE, AND DISPOSE OF ALL DIRT, DEBRIS, RUBBISH AND REMOVE EQUIPMENT NOT SPECIFIED AS REMAINING ON THE PROPERTY. LEASE PREMISES IN CLEAN CONDITION AND SHALL BE SUBJECT TO APPROVAL BY THE PROPERTY OWNER AND THE PROJECT MANAGER.
20. THE CONTRACTOR SHALL PROVIDE ON-SITE TRASH RECEPTACLES FOR COLLECTION OF NON-TOXIC DEBRIS. ALL TRASH SHALL BE COLLECTED ON A DAILY BASIS.
21. ALL TOXIC AND ENVIRONMENTALLY HAZARDOUS SUBSTANCES SHALL BE USED AND DISPOSED OF IN ACCORDANCE WITH MANUFACTURER SPECIFICATIONS. UNDER NO CIRCUMSTANCES SHALL RINSING OR DUMPING OD THESE SUBSTANCES OCCUR ON-SITE.
22. UNLESS NOTED OTHERWISE, CONTRACTOR SHALL BE RESPONSIBLE FOR OBTAINING AND PAYING FOR ALL PERMITS NECESSARY FOR CONSTRUCTION.
23. THE PROJECT MANAGER MAY RETAIN THE SERVICES OF A TESTING LABORATORY TO PERFORM QUALITY ASSURANCE TESTING ON VARIOUS PORTIONS OF THE CONTRACTORS WORK. WHEN REQUESTED, THE CONTRACTOR SHALL INFORM THE TESTING LABORATORY AND ASSIST THEM IN COMPLETING TESTS.
24. THE CONTRACTOR SHALL MAINTAIN AND SUPPLY THE PROJECT MANAGER WITH AS-BUILT PLANS UPON COMPLETION OF THE PROJECT.

GENERAL NOTES

SCALE: NOT TO SCALE

1

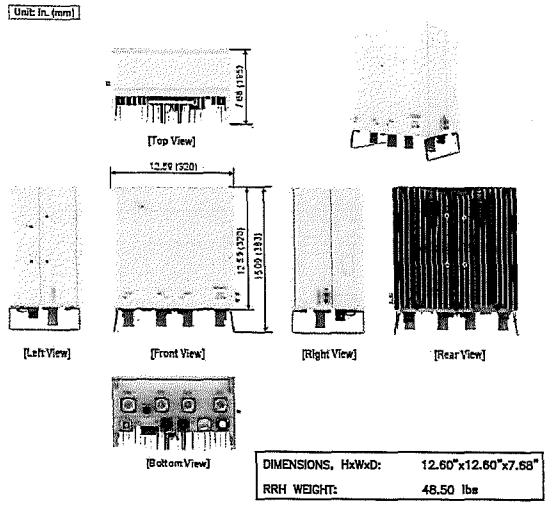

RRH-C4 (4T4R-RFD01F-26A) 800MHz DETAIL

SCALE: NOT TO SCALE

2

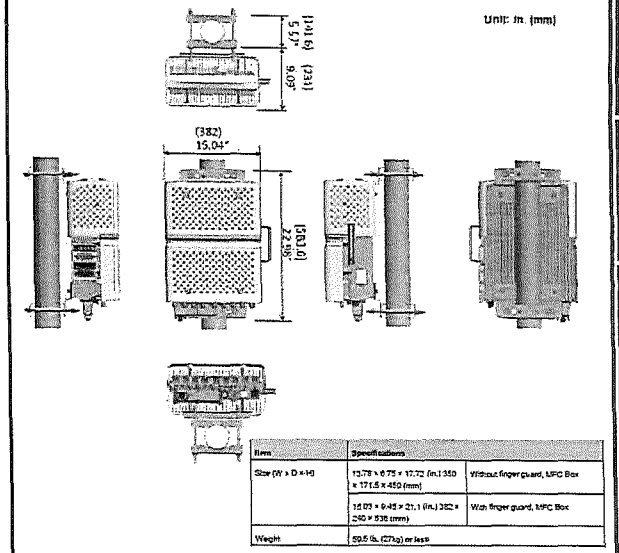

RRH-B8 2500MHz DETAIL

SCALE: NOT TO SCALE

3

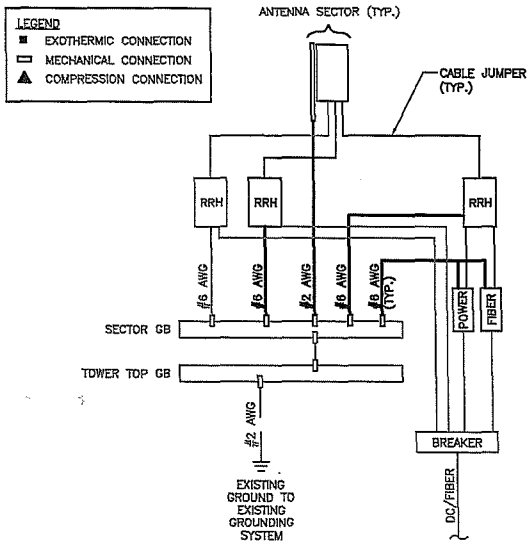

RISER DIAGRAM

SCALE: NOT TO SCALE

4

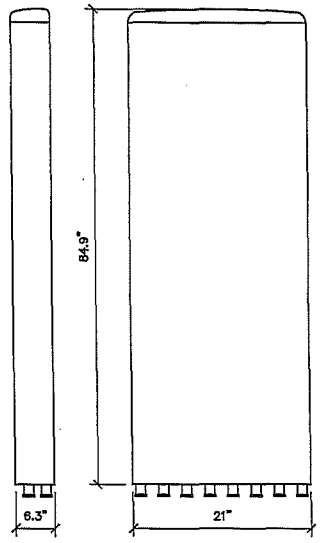

KMW ANTENNA
ETCR-654L12H6

DIMENSIONS, HxWxD: 84.9"x21"x8.3"

ANTENNA WEIGHT: 84.9 lbs

ANTENNA DETAIL

SCALE: NOT TO SCALE

5

PLANS PREPARED FOR:

Sprint

SITE ACQUISITION:

NTPWIRELESS
EVERY SITE. EVERY DAY

PLANS PREPARED BY:

W-T COMMUNICATION DESIGN GROUP, LLC.
WIRELESS INFRASTRUCTURE
2875 Prairie Avenue
Hoffman Estates, Illinois 60192
PH: (224) 293-6333 FAX: (224) 293-6444
www.wtengineering.com

COPYRIGHT © 2018 W-T COMMUNICATION DESIGN GROUP, LLC.

A&E LICENSE:

LICENSED PROFESSIONAL ENGINEER
JEFF S. GUTOWSKY
17222
IOWA

JEFFERY S. GUTOWSKY
PROFESSIONAL ENGINEER
STATE OF IOWA
LICENSE # 17222
EXPIRES: 12/31/19 SIGNED: 02/01/18

DRAWING NOTICE:

THESE DOCUMENTS ARE CONFIDENTIAL AND ARE THE SOLE PROPERTY OF SPRINT AND MAY NOT BE REPRODUCED, DISSEMINATED OR REDISTRIBUTED WITHOUT THE EXPRESS WRITTEN CONSENT OF SPRINT

REVISIONS:

DESCRIPTION	DATE	BY	REV
FOR CLIENT REVIEW	09.25.17	KLO	A
FINAL	02.01.18	ATK	0

W-T PROJECT NUMBER: T1701260

SITE CASCADE: DM03IP433

SITE ADDRESS: 1317 NORTH COURT CARROLL, IA 51401

PROJECT: DO MACRO UPGRADE 800/2500/TRIBAND

SHEET DESCRIPTION: SITE DETAILS

SHEET NUMBER: A-2

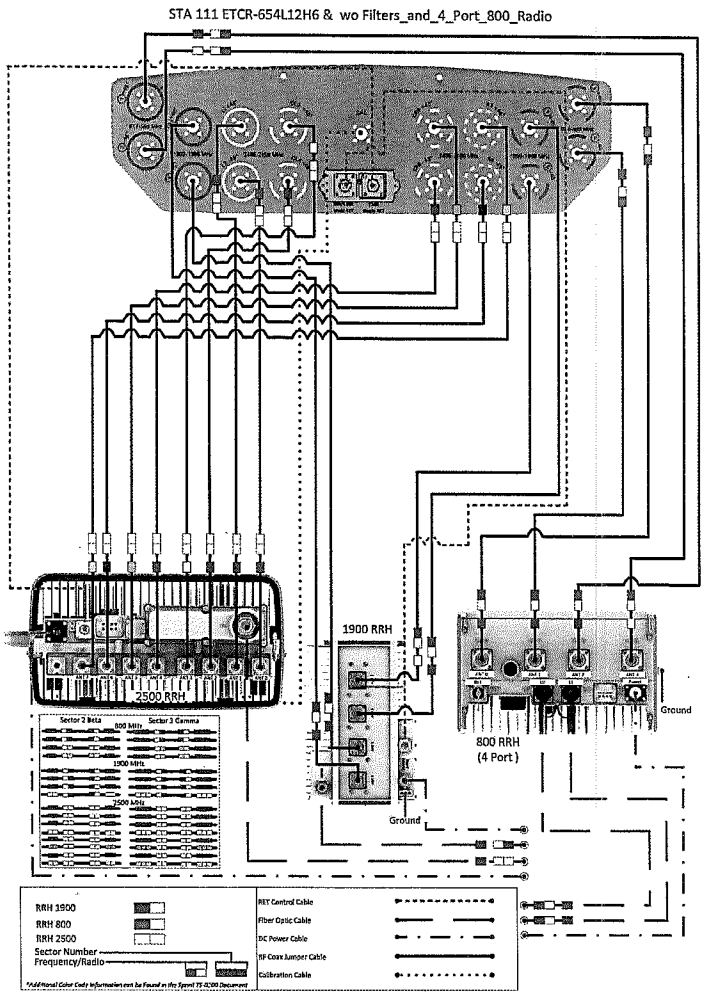

PLUMBING DIAGRAM

SCALE: NOT TO SCALE

1

PLANS PREPARED FOR:

Sprint

SITE ACQUISITION:

NTPWIRELESS
EVERY SITE. EVERY DAY

PLANS PREPARED BY:

W-T COMMUNICATION DESIGN GROUP, LLC.
WIRELESS INFRASTRUCTURE
2875 Prairie Avenue
Hoffman Estates, Illinois 60192
PH: (224) 293-6333 FAX: (224) 293-6444
www.wtengineering.com

COPYRIGHT © 2018 W-T COMMUNICATION DESIGN GROUP, LLC.

A&E LICENSE:

LICENSED PROFESSIONAL ENGINEER
JEFF S. GUTOWSKY
17222
IOWA

JEFFERY S. GUTOWSKY
PROFESSIONAL ENGINEER
STATE OF IOWA
LICENSE # 17222
EXPIRES: 12/31/19 SIGNED: 02/01/18

DRAWING NOTICE:

THESE DOCUMENTS ARE CONFIDENTIAL AND ARE THE SOLE PROPERTY OF SPRINT AND MAY NOT BE REPRODUCED, DISSEMINATED OR REDISTRIBUTED WITHOUT THE EXPRESS WRITTEN CONSENT OF SPRINT

REVISIONS:

DESCRIPTION	DATE	BY	REV
FOR CLIENT REVIEW	09.25.17	KLO	A
FINAL	02.01.18	ATK	0

W-T PROJECT NUMBER:

T1701260

SITE CASCADE:

DM03IP433

SITE ADDRESS:

1317 NORTH COURT
CARROLL, IA 51401

PROJECT:

DO MACRO UPGRADE
800/2500/TRIBAND

SHEET DESCRIPTION:

PLUMBING DIAGRAM

SHEET NUMBER:

A-3