City of Carroll

112 E. 5th Street Carroll, Iowa 51401-2799 (712) 792-1000 FAX: (712) 792-0139

MEMO TO: Honorable Mayor and City Council Members

FROM: Mike Pogge-Weaver, City Manager MTPW

DATE: April 11, 2019

SUBJECT: Policy 0716 – Small Wireless Facility Design Guidelines

A recent FCC Order suggests that all local jurisdictions comply with various rules and recommendations on the exercise of local aesthetic, zoning, public works, and fee schedules when dealing with small cell (Small Wireless Facility) installations. Communities have until April 15, 2019 to approve and publish Small Wire Facility regulation. In addition to the Small Wireless Facility Antenna/Tower Siting Policy (Policy 0715), staff is recommending the approval of Small Wireless Facility Guidelines.

The City recognizes its responsibilities under the federal Telecommunications Act of 1996 and Iowa law (Iowa Code Chapter 8C: Iowa Cell Siting Act) and believes that it is acting consistent with Iowa Code Chapter 8C: Iowa Cell Siting Act of the law in ensuring that development activity does not endanger public health, safety, or welfare. The City intends this Policy will ensure that the installation, augmentation and relocation of Small Wireless Facility installations in the public rights-of-way are conducted in such a manner as to lawfully balance the legal rights of applicants under the federal Telecommunications Act and Iowa Code Chapter 8C: Iowa Cell Siting Act, relating to the Siting of Small Wireless Facilities with the rights, safety, privacy, property and security of residents of the City.

Policy 0716 addresses the Design Guidelines for Small Wireless Facilities in the City of Carroll.

The guidelines are intended to provide technical data to aid in the construction of Small Wireless Facilities and works with Policy 0715 that addresses Small Wireless Facility Antenna/Tower Siting in the City of Carroll. The Policy provides background information, notes applicable law and regulations, provides purpose, includes definitions and include technical information for poles and includes details for poles, cabinets, antennas and foundations. The proposed Design Guidelines specify that all antennas must be located within a utility pole if located within the right-of-way.

RECOMMENDATION: Mayor and City Council consideration and approval of a resolution approving Policy 0716 – Small Wireless Facility Design Guidelines.

1869 Carroll 2019
150 YEARS

RESOLUTION NO. _____

A RESOLUTION APPROVING POLICY 716 – SMALL WIRELESS FACILITY DESIGN GUIDELINES

WHEREAS, Policy 716 – Small Wireless Facility Design Guidelines has been deemed necessary due to a recent Federal Communications Commission Order; and

WHEREAS, the Small Wireless Facility Design Guidelines is attached hereto as Exhibit "A"; and

WHEREAS, it is determined that the approval of the attached Small Wireless Facility Design Guidelines is in the best interest of the City of Carroll, Iowa;

NOW, THEREFORE, BE IT RESOLVED that Policy 715 - Small Wireless Facility Design Guidelines, attached as Exhibit "A", be authorized and approved.

PASSED AND APPROVED by the Carroll City Council of the City of Carroll, Iowa this 15th day of April, 2019.

CITY COUNCIL OF THE
CITY OF CARROLL, IOWA

BY:_____
Eric P. Jensen, Mayor

ATTEST:

By:_____
Laura A. Schaefer, City Clerk

CITY OF CARROLL

POLICIES AND PROCEDURES MANUAL

Subject	**Policy No.**
Small Wireless Facility Design Guidelines	0716
Responsible Division(s), Office(s)	**Related Policies & Procedures**
Public Works Department Building Department	Policy 0715 – Small Wireless Facility Antenna/Tower Right-of-Way Siting
Effective/Revision Date	**Approvals(s)**
April 15, 2019	Michel J. Pogge-Weaver

The City of Carroll Small Wireless Facility Design Guidelines are hereby established with the goal of accommodating the installation of small wireless (4G/LTE/5G) technology within City of Carroll public rights-of-way provided that the installations are completed in the most context sensitive manner through the establishment of minimum standards for:

- Aesthetics
- Location
- Spacing of facilities along streets
- Accommodation of two to three providers at each location
- Safety
- Noise

See attached "Small Wireless Facility Design Guidelines" for the full guidelines.

SMALL WIRELESS FACILITY DESIGN GUIDELINES

APRIL 15, 2019

CARROLL CITY POLICY #0716

Table of Contents

1. Executive Summary 3
1.1 Background 3
1.2 FCC Order 3
1.3 Goal Statement 4
2. General Information 5
2.1 Introduction and Purpose 5
2.2 Definitions 5
2.3 Application Guidelines 9
3. Pole Design Guidelines 11
3.1 Utility Distribution Poles 11
3.2 Utility Streetlight Poles 11
3.3 Municipal Poles 11
3.4 New Poles 12
4. Pole Siting Requirements 13
4.1 Location 13
4.2 Height Requirements 14
4.3 Noise 14
4.4 Related Ground Equipment 14
5. Safety Requirements 15
Appendix A: Designs 16
A.1 Small Wireless Facility Pole 16
A.2 Base Cabinet 17
A.3 Upper Antenna Module 18
A.4 Foundation Selection 18
A.5 Product Selection Matrix 19

1. Executive Summary

1.1 Background

The City of Carroll, as with communities across the country and around the world, is facing the next wave of communications technology. While the economic benefits are immense, it has the potential to impact the safety, aesthetic values, and enjoyment of our community in a manner and to a degree that is far more extensive than cellular phones and other types of recent technology.

Small wireless communications, also known as 5G technology, utilizes higher frequencies with the capability to accommodate significantly higher data needs than current 4G/LTE technologies. The physical limits of the higher frequencies require that the transmitters be installed at the spacing of streetlights or fire hydrants rather than 2+/- miles or greater distances that 4G/LTE technologies accommodate. The result of this physical need is that the public rights-of-way are the optimal location to install the required equipment. The Federal Communications Commission (FCC) has adopted the Declaratory Ruling and Third Report and order FCC 18-133 outlining the extent to which local agencies may or may not regulate the installation of these facilities within the public rights-of-way and the use of existing public infrastructure.

Similar to the advent of the telephone which required extensive wires, switch boxes, poles and other structures to provide these services, small wireless communications technology will require a structure to mount a transmitter approximately every 400 to 500 feet with fiber and power connections to each one.

Absent the adoption of guidelines to assure that installations are context sensitive, service providers would be free to install equipment with no concern for the visual impact that they create. This document seeks to accommodate the implementation of the new technology while assuring that the new infrastructure is installed using context sensitive solutions.

In addition, the equipment needs to be located where it will not interfere with visibility for drivers, interference with sidewalks, or other common amenities found in public rights-of-way.

Other issues such as safety, noise and accommodating multiple providers at each location are also addressed within these guidelines.

1.2 FCC Order

On September 26, 2018, the Federal Communications Commissions (FCC) adopted a Declaratory Ruling and Third Report and Order, titled “Accelerating Wireless Broadband Deployment by Removing Barriers to Infrastructure Investment” (the Order). The Order establishes fees, “shot clocks,” and provides mandates on local governments’ control of small wireless infrastructure.

The FCC Order establishes fees as follows:

- $500 for non-recurring fees, including a single up-front application that includes up to five Small Wireless Facilities, with an additional $100 for each small wireless facility beyond five
- $1,000 for non-recurring fees for a new pole (not a collocation) intended to support one or more small wireless facilities.
- $270 per small wireless facility per year for all recurring fees, including any possible ROW access fee or fee for attachment to municipally-owned structures in the ROW

The following shot clocks are the FCC's permit review times for new small wireless facilities:

- A 60-day review period for collocation of small wireless facilities
- A 90-day review period for construction of new small wireless facilities

Existing shot clocks for non-small wireless facilities deployments remain in place:

- 90 days for collocation on an existing structure
- 150 days for deployment on a new structure

According to the FCC Order, the shot clock rules are as follows:

- Both the new and existing shot clocks apply to "any approval that a siting authority must issue under applicable law prior to deployment." This includes zoning approvals and building permits, and may also include license or franchise agreements to access the rights-of-way, leases for use of municipal poles or property in the rights-of-way, electric permits and road closure permits, among others.
- For small wireless facilities deployments, shot clocks are reset if the siting authority notifies the applicant within 10 days after submission that the application is incomplete. For subsequent determinations of incompleteness, the shot clock would toll—not reset—if the siting authority provides written notice within 10 days that the supplemental submission did not provide the requested information.
- For non-small wireless facilities, shot clocks begin to run when an application is first submitted, and can be paused—not reset—if the siting authority notifies the applicant within 30 days that the application is incomplete. For subsequent determinations of incompleteness, the process is the same as described above for small wireless facilities.
- Failure to act within the new small wireless facility shot clock constitutes a presumptive violation of the Communications Act and applicants may seek expedited injunctive relief in court within 30 days of a local government missing a shot clock deadline. There is no "deemed granted" remedy.

The FCC Order limits aesthetic reviews and requirements (including undergrounding, spacing, and historic/environmental requirements) to what is:

(a) reasonable

(b) no more burdensome than those applied to other types of infrastructure deployments

(c) objective and published in advance

The effective date of the 2018 Order with respect to the new limitations on rights-of-way fees and deadlines for acting on permit applications was January 14, 2019, and the new limitations on aesthetic standards will go into effect April 15, 2019.

1.3 Goal Statement

The City of Carroll Small Wireless Facility Design Guidelines are hereby established with the goal of accommodating the installation of small wireless (4G/LTE/5G) technology within City of Carroll public rights-of-way provided that the installations are completed in the most context sensitive manner through the establishment of minimum standards for:

- Aesthetics
- Location
- Spacing of facilities along streets
- Accommodation of two to three providers at each location
- Safety
- Noise

2. General Information

2.1 Introduction and Purpose

These Small wireless Design Guidelines provide objective, technically feasible criteria applied in a non-discriminatory manner that reasonably match the aesthetics and character of the immediate area regarding all of the following, which the City shall consider in reviewing an application.

(a) The location of any ground-mounted small wireless facilities including their relationship to other existing or planned small wireless sites

(b) The location of a small wireless facility on a wireless support structure

(c) The appearance and concealment of small wireless facilities, including those relating to materials used for arranging, screening, and landscaping

(d) The design and appearance of a wireless support structure including any height requirements adopted in accordance with these guidelines

It is the goal of the City to allow the installation of a small wireless infrastructure with a minimum foot print. This shall be accomplished by small wireless siting and the use of multi-cell poles that can accommodate multiple applicants.

The provisions of these Guidelines shall not limit or prohibit the City's discretion to promulgate and make publicly available other information, materials or requirements in addition to, and separate from these Small Wireless Design Guidelines that do not conflict with state or federal law.

2.2 Definitions

The following words, terms and phrases, when used in these guidelines, shall have the meanings ascribed to them in this section, except where the context clearly indicates a different meaning:

Administrative Review means ministerial review of an Application by the City relating to the review and issuance of a Permit, including review by the Public Works Director or designee, if desired, to determine whether the issuance of a Permit is in conformity with the applicable provisions of these Guideline and all City Codes.

Antenna means communications equipment that transmits and/or receives electromagnetic radio frequency signals used in the provision of Wireless Services. This definition does not apply to broadcast antennas, antennas designed for amateur radio use, or satellite dishes for residential or household purposes.

Applicable Codes means any code drafted and adopted by the City as well as uniform building, fire, safety, electrical, plumbing, Uniform Traffic Control or mechanical codes adopted by a recognized national code organization to the extent such codes have been adopted by the City, including any amendments adopted by the City, or otherwise are applicable in the jurisdiction.

Applicant means the person submitting an application.

Application means the process by which a person submits a request to perform construction activity and/or indicates a desire to be granted permission in any way to utilize the rights-of-way of all, or a part, of the City. An application includes all written documentation, in whatever form or forum, made by a person to the City concerning: the installation of any type of public improvements, public utility facilities, the construction of a cable system or any type of information or telecommunications system over, under, on or through the rights-of-way.

Attached wireless facilities are those affixed to a structure except optical fiber, wires, coaxial cable and the mounting hardware used to attach optical fiber, wires, and coaxial cable. Examples of attached facilities

include but are not limited to antennas, telephone boxes, power boxes, and other equipment boxes and cabinets on structures located on the ground.

Batched Applications is the submission of multiple siting applications at one time. Batched applications shall not exceed 10 individual Small Wireless Facilities.

City means the City of Carroll.

City cost means all costs borne by the City for the administration of these guidelines.

City Council means the Carroll City Council.

City Manager means the Carroll City Manager or designee.

Code means the Carroll City Code.

Collocate means to install or mount a Small Wireless Facility in the Public ROW on an existing Support Structure, an existing Tower, or on an existing Pole to which a Small Wireless Facility is attached at the time of the Application. "Collocation" has a corresponding meaning.

Communications Facility means collectively, the equipment at a fixed location or locations within the Public ROW that enables Communications Services, including: (i) radio transceivers, Antennas, coaxial, fiber-optic or other cabling, power supply (including backup battery), and comparable equipment, regardless of technological configuration; and (ii) all other equipment associated with any of the foregoing. A Communications Facility does not include the Pole, Tower or Support Structure to which the equipment is attached.

Construction permit means the authorization to undertake any type of excavation or work, as defined herein, in the rights-of-way or to construct public improvements, as defined herein, in the City or undertake any construction activity within the City. A construction permit can be issued either as a ROW construction permit or as a site construction permit, as applicable.

Contractor means a person, partnership, corporation, or other legal entity who undertakes to construct, install, alter, move, remove, trim, demolish, repair, replace, excavate, or add to any improvements or public improvements covered by these guidelines, that requires work to be undertaken and workers, and/or equipment to be in the ROW in the process of performing the above-named operations. Contractor, as the term is defined herein, should include any and all types of general contractor and subcontractor and successors or assigns of said contractor.

Development Code means Carroll Code of Ordinances, as amended.

Director means the Public Works Director for the City.

Equipment Concealed Whenever technically feasible, antennas, cabling, and equipment shall be fully concealed within a Pole, or otherwise camouflaged to appear to be an integrated part of a Pole.

Excavate* or *excavation means to dig into, including boring into, or in any way remove, distribute or penetrate any part of a ROW.

Facilities means any and all equipment, structures, materials or tangible components located in the rights-of-way and used to provide a service, including without limitation: all plants, whether inside or outside, fiber strands or optic lines, electronic equipment, amplification equipment, optic equipment, transmission and distribution structures, antennas of any type, lines, termination equipment, pipes, poles, ducts, mains, conduits, inner ducts, regenerators, repeaters, underground lines, vaults, manholes, pull boxes, splice closures, wires and cables, and all other like equipment, fixtures and appurtenances used in connection with transmitting, receiving, distributing, offering, and/or providing such service. Facilities shall include, as the context dictates, wireless telecommunication facilities, as defined herein.

Franchise means a right granted by the City for use of the rights-of-way, or any other City-owned or City-controlled real property designated to be or actually used by public utilities, cable providers, or other operators/entities for which a franchise can be granted pursuant to law, for the construction, operation and/or maintenance of a public utility, or any type of cable system or other operations within all of the City or such portions therefore as may be proposed and authorized for such construction operation and/or maintenance, including the City's growth area. Any such authorization, in whatever form granted, shall not mean and shall not include any license or permit required for the privilege of transacting and carrying on a business within the City as required by Code, other ordinances, resolutions or regulations of the City.

Height means maximum height of the small wireless facility, including antenna, above established grade measured at the base of the structure

Indemnification means that any provider who owns or operates Small Wireless Facilities or Wireless Support Structures in the ROW shall indemnify, protect, defend, and hold the City and its elected officials, officers, employees, agents, and volunteers harmless against any and all claims, lawsuits, judgments, costs, liens, losses, expenses, fees to include reasonable attorney fees and costs of defense, proceedings, actions, demands, causes of action, liability and suits of any kind and nature, including personal or bodily injury or death, property damage or other harm for which recovery of damages is sought, to the extent that it is caused by the negligence of the Operator who owns or operates Small Wireless Facilities and wireless service in the ROW, any agent, officer, director, representative, employee, affiliate, or subcontractor of the Operator, or their respective officers, agents, employees, directors, or representatives while installing, repairing, or maintaining facilities in the Rights-of-Way.

Inspector means the person designated by the City within the Public Works Department or the City Building Department to fulfill the responsibilities that have been empowered with such position.

Landscape means any combination of living plant material, such as trees, shrubs, vines, ground covers, flowers, vegetables, turf or grass; natural features, such as land and water forms; and structural features, including but not limited to landscaped pedestrian plazas, fountains, reflecting pools, screening, walls, fences and benches.

Major Wireless Telecommunications Facility means telecommunication towers, poles or similar structures greater than 50 feet in height, including accessory equipment such as transmitters, repeaters, microwave dishes, horns, and other types of equipment for the transmission or receipt of such signals, as well as support structures, equipment buildings and parking areas***.***

Ordinary Maintenance and Repair means inspections, testing and/or repair that maintain functional capacity, aesthetic and structural integrity of a Communications Facility and/or the associated Support Structure, Pole or Tower, that does not require blocking, damaging or disturbing any portion of the Public ROW.

Permittee means any person making application for or in possession of any type of construction permit to perform any construction activity, excavation, or work within the corporate limits of the City.

Provider means any person including a franchisee who is providing or is in the process of seeking permission to provide a service to citizens of the City through the placement of facilities or structures either owned or leased in and thereby occupying the rights-of-way, as defined herein.

Public improvements means any item placed or constructed in public rights-of-way intended for public use including, but not limited to: roadways, streets, alleys, sidewalks, curbs, gutters, trails, crosswalk or other traffic markings or traffic structures, utilities (water, sanitary sewer, or storm sewer) either owned by or dedicated to the City, or over which the City has or there is recorded a public easement, any private access either owned or dedicated to the City, parking lots, or landscaping, whether privately or publicly owned or maintained, unless otherwise specifically exempted within these guidelines.

Responsible party means any person or entity who owns facilities or structures located or to be located in the City rights-of-way and/or who is liable, whether financially or otherwise, for any installation, repair, or maintenance of facilities, or public improvements, either public or private, placed on or to be placed in the City rights-of-way.

Rights-of-way* or *ROW means the surface and space above and below any real property in which the City has a real property interest and/or which have been dedicated to the public or is hereafter dedicated to the public and maintained under public City or by others at the direction of the public City and located within the City including, but not limited to, public: streets, roadways, highways, avenues, lanes, alleys, bridges, sidewalks, easements, public ways and similar public property and areas.

ROW construction permit means a category of the general construction permit under these guidelines.

Sidewalk means a paved walkway or pathway for the purpose of pedestrian traffic abutting or running parallel or adjacent to a street.

Site construction permit means a category of the general construction permit that is issued under these guidelines.

Signage Signage is prohibited on all small wireless facilities and wireless support structures, including stickers, logos, and other non-essential graphics and information unless required by the FCC, except for a small placard identifying the service provider and contact information, which shall be placed at 6-feet above grade, facing away from the public rights-of-way.

Small Wireless Facility(ies) are low powered antennas that provide cellular and data coverage to small geographic areas supplementing the larger cellular network. It includes all equipment required for the operation and maintenance of radio-frequency communications systems that transmit and/or receive signals but are not "major wireless telecommunications facilities," including antennas, electronics, and other types of equipment required for the transmission or receipt of such signals.

Alternatively, Small Wireless Facility means either of the following:

(a) Micro wireless facilities that are no larger in dimension than twenty-four (24) inches in length, fifteen (15) inches in width, and twelve (12) inches in height and that have an exterior antenna, if any, of no more than eleven (11) inches in length; or

(b) A wireless service facility where each antenna is located inside an enclosure of no more than six (6) cubic feet in volume and where primary equipment enclosures associated with the small wireless facility is cumulatively no more than twenty-eight cubic feet in volume and shall be placed underground unless it is integrally incorporated inside the customary pole structure or base.

Standards and Specifications means the City of Carroll Standards and Specifications for the Design and Construction of Public and Private Improvements, latest revision, as adopted by ordinance.

Street, highway or roadway means the entire width between the boundary lines of every ROW or easement publicly or privately maintained and open to the use of the public for the purposes of vehicular travel.

Structure means anything constructed or erected with a fixed location below, on, or above grade, including, without limitation, service cabinets, junction boxes, foundations, fences, retaining walls, awnings, balconies, and canopies.

Telecommunications means the transmission, between or among points specified by the user, of information of the user's choosing, without change in the form or content of the information as sent and received.

Telecommunication service(s) means the offering of telecommunications for a fee directly to the public, or to such classes of users as to be effectively available directly to the public, regardless of the facilities used.

Telecommunication service provider or ***telecommunications applicant*** means any provider of telecommunications services, except that such term does not include aggregators of telecommunications services (as defined in 47 U.S.C. Section 226).

Telecommunication system means the offering of telecommunications for a fee directly to the public, or to such classes of users as to be effectively available directly to the public, regardless of the facilities used. A system that provides both cable and telecommunications or information services may be considered both as a cable system and a telecommunications system pursuant to this Code.

Utility distribution pole means a structure that supports aerial electric or communications cables with or without a streetlight attached.

Utility Pole the City of Carroll, Iowa currently maintains a decorative lighting zone (bounded by and including West Street, 7th Street, Court Street, and 4th Street) and a decorative lighting corridor (on US Highway 30 between Highway 71 and Grant Road) with decorative lighting. An upright pole or similar structure owned and utilized in a whole or in part by a public utility, municipality. It is designed and used to support electric cables, telephone cables, telecommunication cables, cable service cables, which are used to provide lighting, traffic control, signage, or a similar function.

Wireless facility(ies) means capital equipment and property, including but not limited to the optical fiber, wires, pipes, mains, conduits, ducts, pedestals, antennas, cabinets and electronic equipment located in the streets used for transmitting, receiving, distributing, providing or offering wireless telecommunication services over the spectrum of radio frequencies licensed by the Federal Communications Commission.

Work means any and all types of construction activity or excavation performed within the City, in the ROW, and/or related to installation of public or private improvements in or on any property that is within the City limits or will be dedicated to the City as ROW.

2.3 Application Guidelines

Complete application requirements can be found in the Carroll City Code of Ordinances Rights-of-Way Code, Chapter 113. As a minimum the application must include the following documentation. Unless the wireless regulations provide otherwise, the applicant must submit both a paper copy and an electronic copy (in a searchable format) of any application, as well as any amendments or supplements to the application or responses to requests for information regarding an application, to the Public Works Director. An application is not complete until both the paper and electronic copies are received by the Public Works Director.

No Small Wireless Facility application will be considered complete until all requirements of the City's Small Wireless Facility Antenna/Tower Right-of-Way Siting Policy (Policy No. 0715) have been met.

a. Detailed site and engineering plans.

b. An area map showing the location of all existing above ground poles and facilities within 1,000 feet and the location or locations of all proposed Small Wireless Facilities proposed in that application. Identify what existing facility will be used or replaced including any identifying numbers for the specific pole or a general description of the location such as nearest address or distance and direction from nearest intersection.

c. Photographs or drawings of proposed equipment including make, model and color with dimensions.

d. Visual impact analysis with photo simulations to scale showing before and after conditions.

e. A load analysis completed, sealed and signed by a Professional Engineer licensed and registered by the State of Iowa which indicates that the pole to which the small cell facility will be attached will safely support the loads. If requested, by the City, a copy of the detailed before and after PLA results shall be made available.

f. Certification by a certified RF engineer demonstrating compliance with the FCC standards for radio frequency emissions as they relate to the general public, including aggregate emissions for all co-located equipment.

g. Written documentation demonstrating a good faith effort to locate the facility in the least intrusive location and screened to the greatest extent feasible.

h. The applicant must submit proof that a notice has been mailed to all owners of property within 600 feet of the proposed installation site that the applicant is seeking to place or modify wireless facilities in the ROW. The notice must include: (i) the proposed location of the facility, (ii) a description and scaled image of the proposed facility, and (iii) an email address and phone number for a representative of the applicant who will be available to answer questions from members of the public about the proposed project.

i. Indemnification agreement that indicates the applicant's agreement with the Indemnification definition included in this chapter.

j. A written description identifying the geographic service area for the subject installation, accompanied by a plan and maps showing anticipated future installations and modifications for the following two years, in addition to the master plan described by this section.

k. One entity may submit up to 10 individual applications at one time in a batch. If that entity submits more applications within 30 days of the first batch, the City has the right to retain outside expertise to review those additional applications. All costs for the outside expertise shall be the responsibility of the submitting entity and must be paid before permits are issued

l. License fees for small wireless facilities shall be submitted with the application. The City reserves the right to do a rate study at a future date to establish the license fees for small wireless facilities.

   (a) The fee permissible in the most current FCC regulations but not less than $500 for non-recurring fees, including a single up-front application for collocation applications that includes up to five Small Wireless Facilities, with an additional $100 or the fee permissible in the most current FCC regulations, for each Small Wireless Facility beyond five;

   (b) The fee permissible in the most current FCC regulations but not less than $1,000 for non-recurring fees for a new pole (*i.e.*, not a collocation) intended to support one or more Small Wireless Facilities; and

   (c) The fee permissible in the most current FCC regulations but not less than $270 per Small Wireless Facility per year for all recurring fees, including any possible ROW access fee or fee for attachment to municipally-owned structures in the ROW.

3. Pole Design Guidelines

3.1 Utility Distribution Poles

All attachments to utility distribution poles shall be approved by MidAmerican Energy prior to installation. All equipment shall meet MidAmerican Energy requirements and Carroll's Rights-of-Way permit requirements.

All small wireless facility equipment shall be shrouded. Only two enclosures including the disconnect and antenna shall be installed on any individual utility pole location. Micro wireless facilities that are no larger in dimension than twenty-four (24) inches in length, fifteen (15) inches in width, and twelve (12) inches in heightand that have an exterior antenna, if any, of no more than eleven (11) inches in length; **or**

A wireless service facility where each antenna is located inside an enclosure of no more than three (3) cubic feet or, in the case of an antenna that has exposed elements, the antenna and all of its exposed elements shall fit within an enclosure of no more than three (3) cubic feet.

Ground mounted enclosures, including backup power supply, and electric meters must be concealed within the pole, in existing above-ground cabinets, or placed in a flush-to-grade underground equipment vault or within approved design standard treatments adopted by the City. For additional requirements refer to section *4.4 Related Ground Equipment* in this chapter

3.2 Utility Streetlight Poles

No existing utility pole whose sole purpose is for street lighting can be used to attach small wireless facilities. With the City and Utility approval, the pole shall be replaced with a metal monopole specifically designed to house two applicant's small wireless facility equipment.

The City reserves the right to require a second applicant for the same general space to install a new pole capable of collocating both applicants internally in the pole. The first applicant is required to allow the subsequent applicant to replace the pole with a multi-cell pole. The original pole shall be made available to the installing applicant to salvage. If not retrieved in 30 days the pole shall be declared abandoned and disposed. As an alternative, an applicant may install a new pole that has multiple cells for additional applicants. The City shall have exclusive rights to the extra cells. If the City requires a second applicant to use the extra cell, half of the initial material costs will be refunded to the applicant who installed the pole.

ALTERNATIVE

No small wireless facility shall be located on any Utility street light pole. The applicant will replace the small wireless facility pole within 5 feet of an existing Utility pole location. The applicant shall remove the existing Utility streetlight. The applicant will furnish and install a LED streetlight on the small wireless pole. The applicant will wire the streetlight into the small wireless power source. The City shall reduce the one-time application fee to reimburse for the streetlight. The City will also reduce the annual reoccurring fee to cover the cost of power. The small wireless pole shall have space for at least two (2) internal bays, one of which will be available to another applicant with City approval. Designs will be in accordance with the designs shown in **Appendix A**.

3.3 Municipal Poles

Applicants may submit applications to install small wireless facilities on municipally owned poles. The City will consider such applications assuming the pole is not expected to be used for emergency communications or tolling equipment. If allowed, an applicant may be limited to one municipally owned pole within 300 feet of the nearest Small Wireless Facility owned by the same provider. Applicants shall provide their own power and fiber (or other communications medium) to their small wireless facility. All wiring will be inside poles. The City may require upgrades or replacement of poles if attaching small wireless facilities

is determined to be functionally or aesthetically, problematic. In cases of wood poles, the applicant(s) shall replace the wood pole with an acceptable monopole.

3.4 New Poles

New poles shall be consistent with the pole designs detailed in **Appendix A**. New poles shall match the shape and color of existing poles in the area. Replacement could result in establishing a new citywide standard, however, they will be replaced incrementally as various telecommunication service providers expand their 5G service through neighborhoods and through the City. Support facilities shall be concealed within the pole, in existing above-ground cabinets, or placed in a flush-to-grade underground equipment vault or within approved design standard treatments adopted by the City.

For all new pole installations, the City reserves the right to require a second applicant for the same general space to install a new pole capable of collocating both applicants internally in the pole. The first applicant is required to allow the subsequent applicant to replace the pole with a multi-cell pole. The original pole shall be made available to the installing applicant to salvage. If not retrieved in 30 days the pole shall be declared abandoned and disposed.

4. Pole Siting Requirements

4.1 Location

The City reserves the right to approve all proposed pole locations and to modify those locations as necessary for future City needs, functional and/or aesthetic reasons. The City will work with the applicant to find a suitable location for both the City and the applicant.

Wireless communication facilities shall not be located on historically or architecturally significant structures unless visually and architecturally integrated with the structure and shall not interfere with prominent vistas or significant public view corridors. New small wireless poles shall be located no closer than 300 feet to other poles containing a small wireless facility from the same provider without City approval.

At the sole discretion of the City, multiple poles may be placed at intersections, however, each applicant may apply for only one additional pole at an intersection. Poles shall be located where ever possible on property lines and not in sidewalks or within 10 feet of a driveway. Where ever possible the poles shall be sited to take advantage of existing screening.

All equipment located within the public ROW shall be located such that it meets ADA requirements and does not obstruct, impede, or hinder usual pedestrian or vehicular travel.

Poles shall not be located:

1. Within 30 feet of a fire hydrant unless replacing an existing pole in the same location, reduced distances can be approved by the City;
2. In any manner which would obstruct a public sidewalk or roadway including reducing vertical clearances required by the City:
3. Closer than two (2) feet from curb or sidewalk.
4. Closer than four (4) feet horizontally from City utilities
5. Closer than fifteen (15) feet horizontally from existing trees in the ROW.

In general, Small Wireless Facilities shall be located in areas defined in the City's zoning as follows (Most Preferred to Least Preferred):

1. Industrial areas if not adjacent to a municipal park, residential area, historic district or design district.
2. Highway Rights-of-Way areas if not adjacent to a municipal park, residential area, historic district or design district.
3. Retail and Commercial areas if not adjacent to a municipal park, residential area, historic district or design district.
4. Residential Areas and Parks. A Telecommunication service provider is prohibited from installing a Small wireless pole in a ROW without written consent from the City Council if the ROW is located in or adjacent to a street or thoroughfare that is adjacent to a Municipal park or single-family residential lots or other multifamily residences or undeveloped land that is designated for residential use by zoning or deed restrictions. A Telecommunication service provider installing a Small Wireless Facility or a Small wireless pole in a ROW shall comply with private deed restrictions and other private restrictions in the area that apply to those facilities.
5. Historic districts and design districts. A Telecommunication service provider is prohibited from installing a Small Wireless Facility or a Small wireless pole in the ROW in any area designated

by the City as a design districts or in an area of the City zoned or otherwise designated as a Historic district unless such Small Wireless Facility or a new small wireless pole is camouflaged and other locations listed above are not available as suitable alternatives.

4.2 Height Requirements

The height of a pole used for a small wireless facility within the jurisdiction of Carroll, Iowa shall not exceed the height of surrounding existing poles, unless the **Public Works Department** finds, based on clear and convincing evidence provided by the applicant, that locating the **small wireless facilities** on the rights-of-way is necessary to close a significant coverage or capacity gap in the Applicant's services or to otherwise provide adequate services to customers, and the proposed new monopole or other tower within the rights-of-way is the least intrusive means to do so.

Antennas must be located at a minimum of 12 feet above established grade measured at the base of the wireless support structure

4.3 Noise

The applicant is required to incorporate ambient noise suppression measures and/or required to place the equipment in locations less likely to impact adjacent residences or businesses to ensure compliance with all applicable noise regulations. The maximum allowable noise emitted by the Small Wireless Facility shall not exceed 30 dB measured at a distance of 3 feet from any portion of the facility.

4.4 Related Ground Equipment

The applicant is required to ensure that ground equipment meets the following design criteria to minimize the aesthetic and safety impacts of supporting equipment on the public.

1. Ground Equipment near street corners and intersections: ground equipment should be minimal and the least intrusive. To minimize any obstruction, impediment, or hindrance to the usual travel or public safety on a ROW the maximum line of sight required to add to safe travel of vehicular and pedestrian traffic and in order to maximize that line of sight at Street corners and intersections and to minimize hazards at those locations, ground equipment may not be installed within the visibility triangle or as prohibited by sight distance calculations set out in other applicable law.

2. Ground Equipment near Municipal parks. For the safety of Municipal park patrons, particularly small children, and to allow full line of sights near Municipal park property, the Telecommunication service provider shall not install ground equipment in a ROW that is within a Municipal park or within 250 feet of the boundary line of a Municipal park, unless approved by the City Manager or designee in writing.

3. Minimize Ground equipment density: To enhance the public safety requirements of line of sight of pedestrians, particularly small children, the City's designee may deny a request for a proposed Location if the Telecommunication service provider installs Small Wireless Facility ground equipment where existing ground equipment within 100 feet radius already occupies a footprint of a total of 25 sq. ft. or more.

5. Safety Requirements

Prevention of failures and accidents. Any Person who owns a Small Wireless Facility and/or Wireless Support Structure sited in the ROW shall at all times employ ordinary and reasonable care and install and maintain in use industry standard technology for preventing failures and accidents which are likely to cause damage, injury, or nuisance to the public.

Compliance with fire safety and FCC regulations. Small Wireless Facilities, wires, cables, fixtures, and other equipment shall be installed and maintained in substantial compliance with the requirements of the National Electric Code, all FCC, state, and local regulations, and in such manner that will not interfere with the use of other property.

Changes in state or federal standards and regulations. If state or federal standards and regulations are amended, the owners of the Small Wireless Facilities and/or Wireless Support Structures governed by this chapter shall bring any facilities and/or structures into compliance with the revised standards and regulations within six months of the effective date of the standards and regulations, unless a different compliance schedule is mandated by the regulating agency. Failure to bring Small Wireless Facilities and/or Wireless Support Structures into compliance with any revised standards and regulations shall constitute grounds for removal at the owner's expense.

Surety bond or equivalent financial tool for cost of removal. All owners must procure and provide to the City a bond, or must provide proof of an equivalent financial mechanism, to ensure compliance with all provisions of this chapter. The bond must be maintained for as long as the owner has Small Wireless Facilities and/ or Wireless Support Structures located in the ROW. The bond or equivalent financial method must specifically cover the cost of removal of unused or Abandoned Small Wireless Facilities and/ or Wireless Support Structures or damage to City property caused by an Operator or its agent of each Small Wireless Facility and/ or Wireless Support Structure in case the City has to remove or pay for its removal. Two acceptable alternatives to a bond include a funds set-aside and a letter of credit.

Appendix A: Designs

The following diagrams and information were provided by, and used with the permission of CityPole. The inclusion of this information in no way indicates that the City endorses CityPole or its products.

A.1 Small Wireless Facility Pole

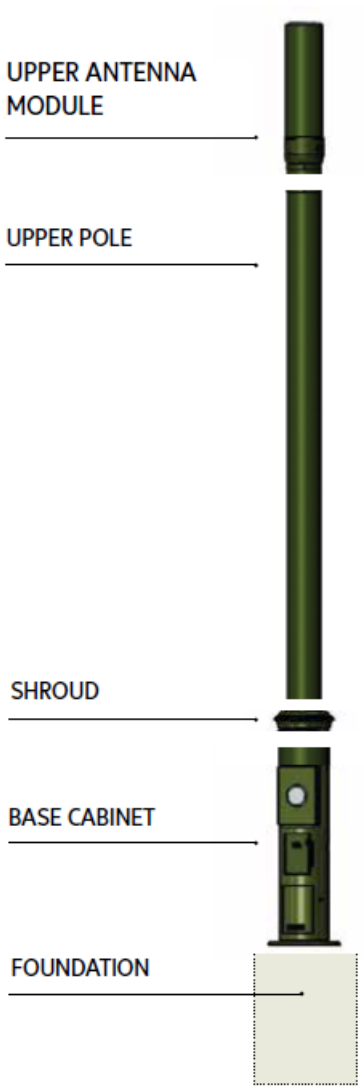

A.2 Base Cabinet

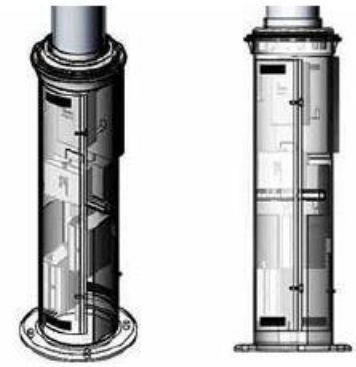

Integrated wireless equipment in base cabinet.

The base cabinet can be configured with a wide range of electrical disconnects to meet local building codes and preferences.

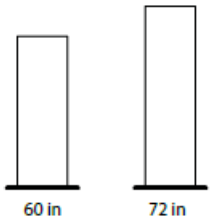

The base cabinet height can be chosen to house future equipment and complement local cityscapes.

A.3 Upper Antenna Module

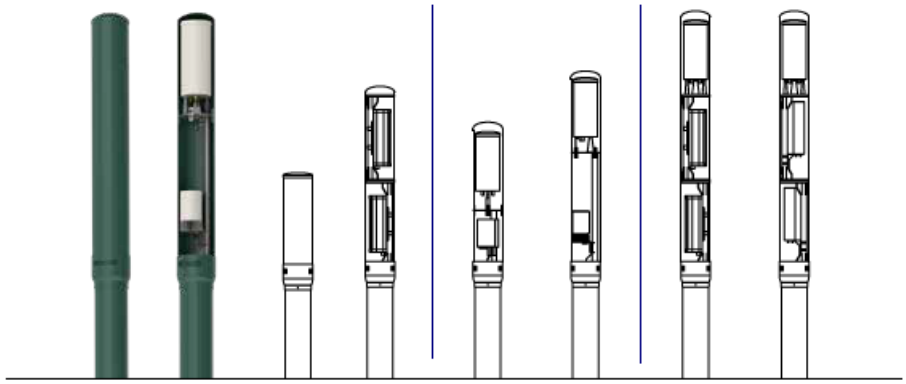

The upper antenna module can be easily reconfigured for a number of technology generations. These includes multiple configurations of cellular technology, various backhaul and low power options such as WiFi, Bluetooth, or Zigbee, and as many as three different technology generations.

A.4 Foundation Selection

CityPole® pre-cast foundation speeds work in the Right of Way.

Caisson and custom designs are available.

A.5 Product Selection Matrix

		Standard CityPole® System Offering	Custom Options
Overall Pole Height		25', 30', 35', and 40' Above Ground Level (AGL)	Available
Color Choices		9 Color Choices are Standard (Custom colors are available.)	
Base Cabinet	Technology Types	1, 2, or 3 Different Technologies can be Accommodated	
	Dimension	Ground Diameter: 18", 20", 24" | Height: 60", Optional 72"	
	Flexible Mount System	FlexMount™ system to reconfigure internals for future equipment sizes.	
	Electrical Options	No Disconnect, Disconnect Only, or Meter and Disconnect.	
	Universal Meter Bay	Accommodates power meter and meter screen requirements as determined by local utility provider; fits meter boxes of all sizes.	
Upper Pole Antenna Module	Rad Center Location	Variable and Based on Pole Height and Other Options	
	Technology Types	1, 2, or 3 Different Technologies can be Accommodated	
	Auxiliary Bay Options	Low Power RF, Backhaul, and Wifi Options can be Accommodated. Multiple and reconfigurable 12¾ inch modules with RlexRail™ universal equipment track system optional.	
	Antenna Mount and Shroud Options	Separate and Secure Bays with RF Transparent Materials to accomodate 4G/5G Equipment. Omni and Panel Types available.	
Accessory Selection	Lighting	Pole can be ordered without lighting or with 1,2,3, or 4 lights.	
	Light Mounts	Standard Plate or Offset Arms depending on light selection	
	Lighting	Shoebox, Cobrahead, Cylindrical, Dome and Acorn	
	Other Technology	Gun Shot Sensors, Video, Weather, Traffic Mgmt	
	Lower Shroud Details	Multiple Options are Available	
	Base Plate Details	Multiple Options are Available	
	Foundation Options	Pre-cast, or Cast-In-Place	
Environmental Control	Thermal Management	All Equipment and Antenna Bays Monitored for Temperature. Passive and Forced Air Standard; Heat Pipe and Thermoelectrical Optional	
	Security	External and Internal Locking Features. CityPole® FlexSmart™ Control and Connectivity Optional.	
	Monitoring and Control	Industrial Controller with 24 Digital and 12 Analog Inputs with FlexSmart™	